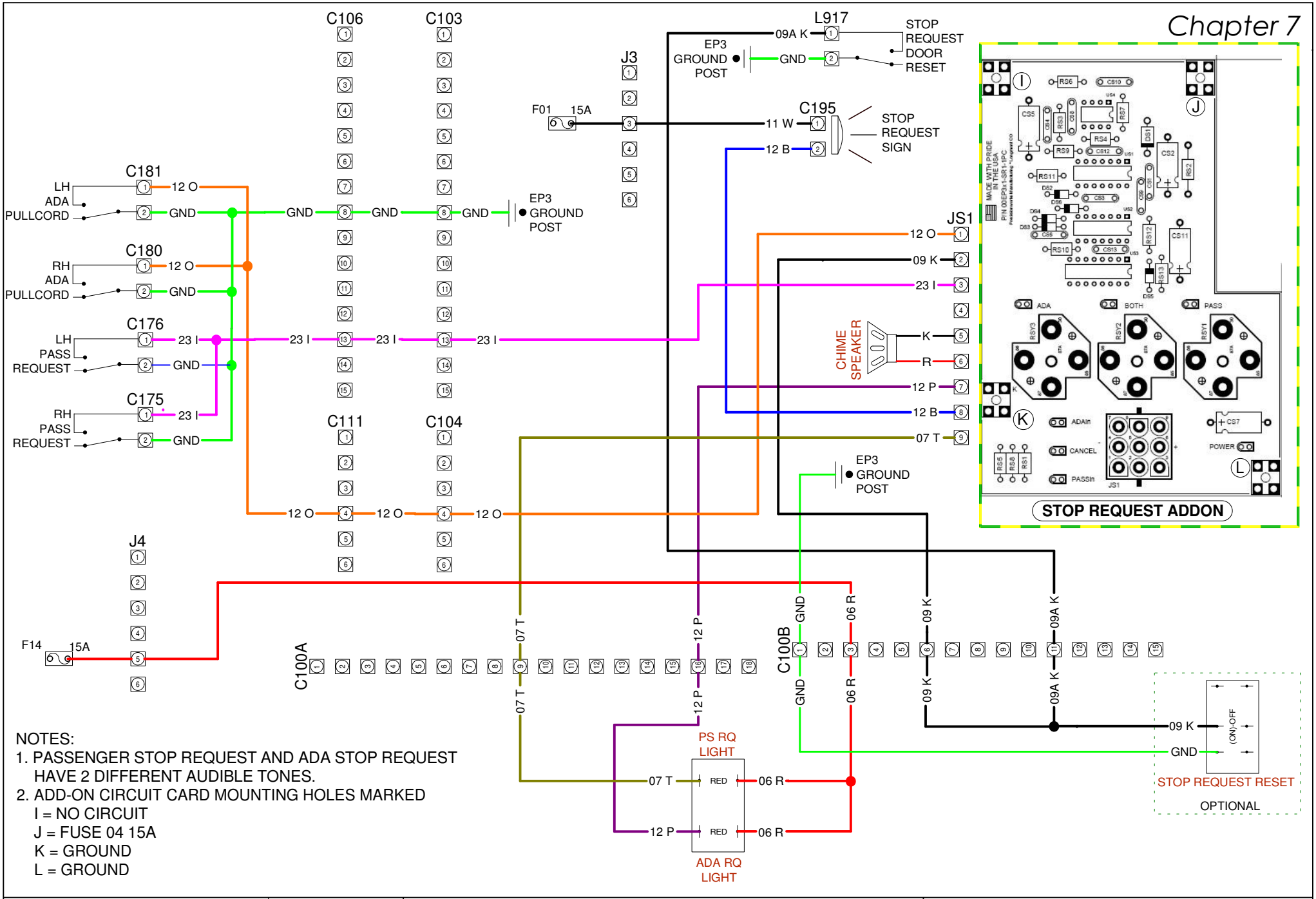

NOTES:
1. PASSENGER STOP REQUEST AND ADA STOP REQUEST HAVE 2 DIFFERENT AUDIBLE TONES.
2. ADD-ON CIRCUIT CARD MOUNTING HOLES MARKED
   I = NO CIRCUIT
   J = FUSE 04 15A
   K = GROUND
   L = GROUND

ElDorado National
a THOR company
1655B WALL STREET
SALINA, KS 67401

APPLICATIONS:
EP3 System

THIS DRAWING IS THE PROPERTY OF ELDORADO NATIONAL COMPANY, A THOR INDUSTRIES COMPANY AND IS NOT TO BE DUPLICATED OR USED IN ANY WAY DETRIMENTAL TO THEIR BEST INTEREST.

TITLE:
Stop Request System

CHAPTER:
Chapter 7

SHEET:
1