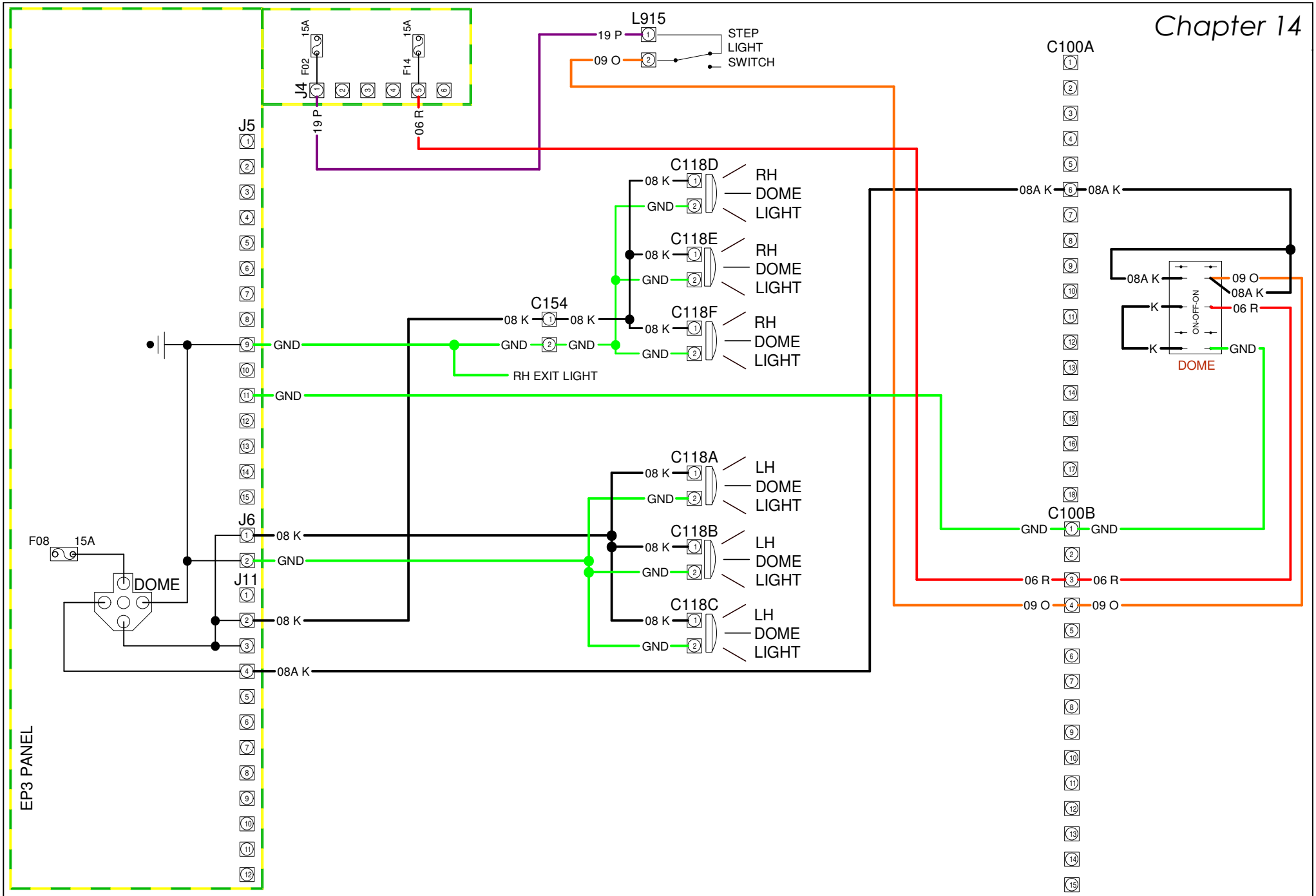

ElDorado National
a THOR company

1655B WALL STREET
SALINA, KS 67401

APPLICATIONS:
EP3 System

THIS DRAWING IS THE PROPERTY OF ELDORADO NATIONAL COMPANY, A THOR INDUSTRIES COMPANY AND IS NOT TO BE DUPLICATED OR USED IN ANY WAY DETRIMENTAL TO THEIR BEST INTEREST.

TITLE:
Dome Lights

CHAPTER:
Chapter 14

SHEET:
1