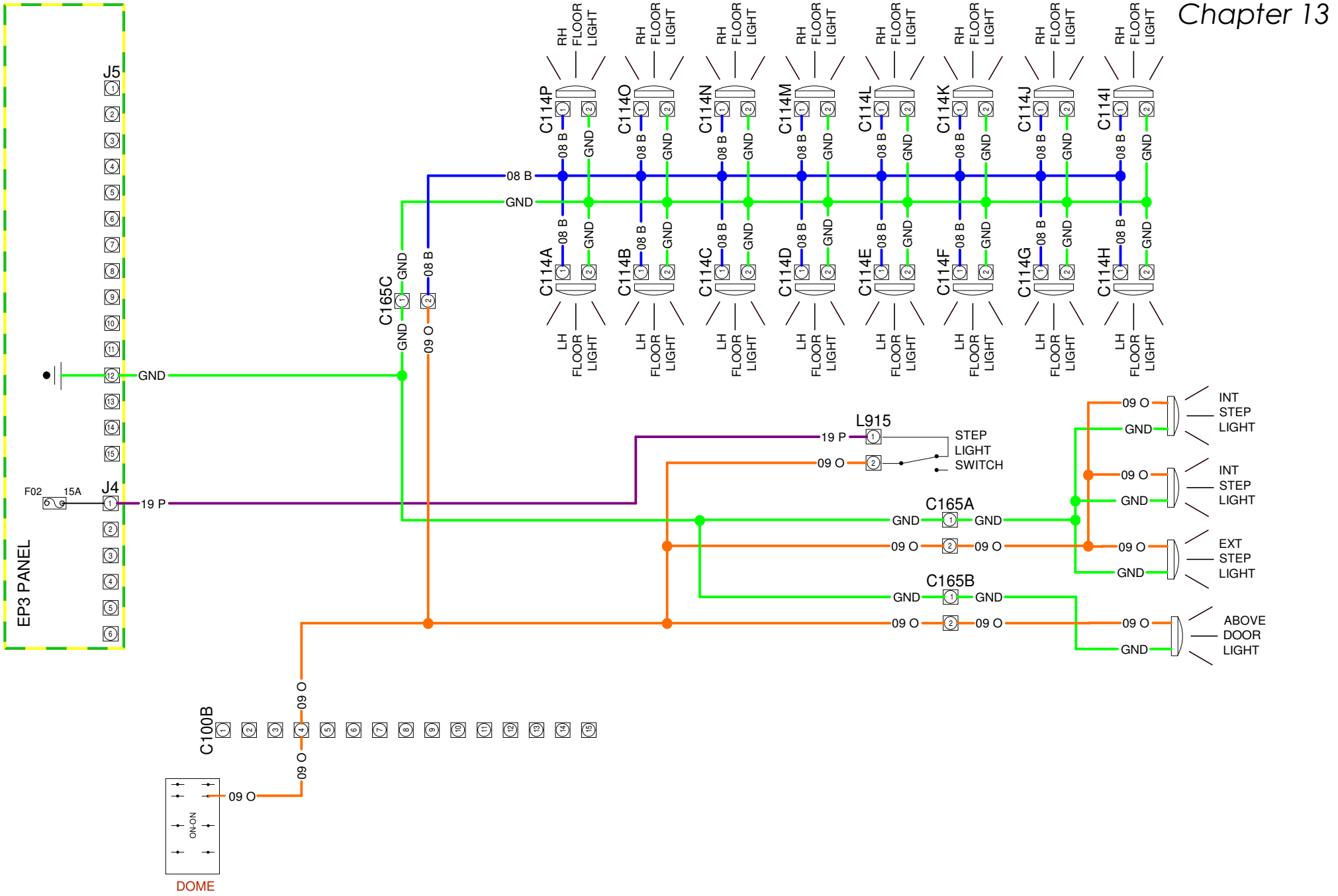

ElDorado National
a THOR company
1655B WALL STREET
SALINA, KS 67401

APPLICATIONS:
EP3

THIS DRAWING IS THE PROPERTY OF ELDORADO NATIONAL COMPANY, A THOR INDUSTRIES COMPANY AND IS NOT TO BE DUPLICATED OR USED IN ANY WAY DETRIMENTAL TO THEIR BEST INTEREST.

TITLE:
Floor Lights

CHAPTER:
Chapter 13

SHEET:
1