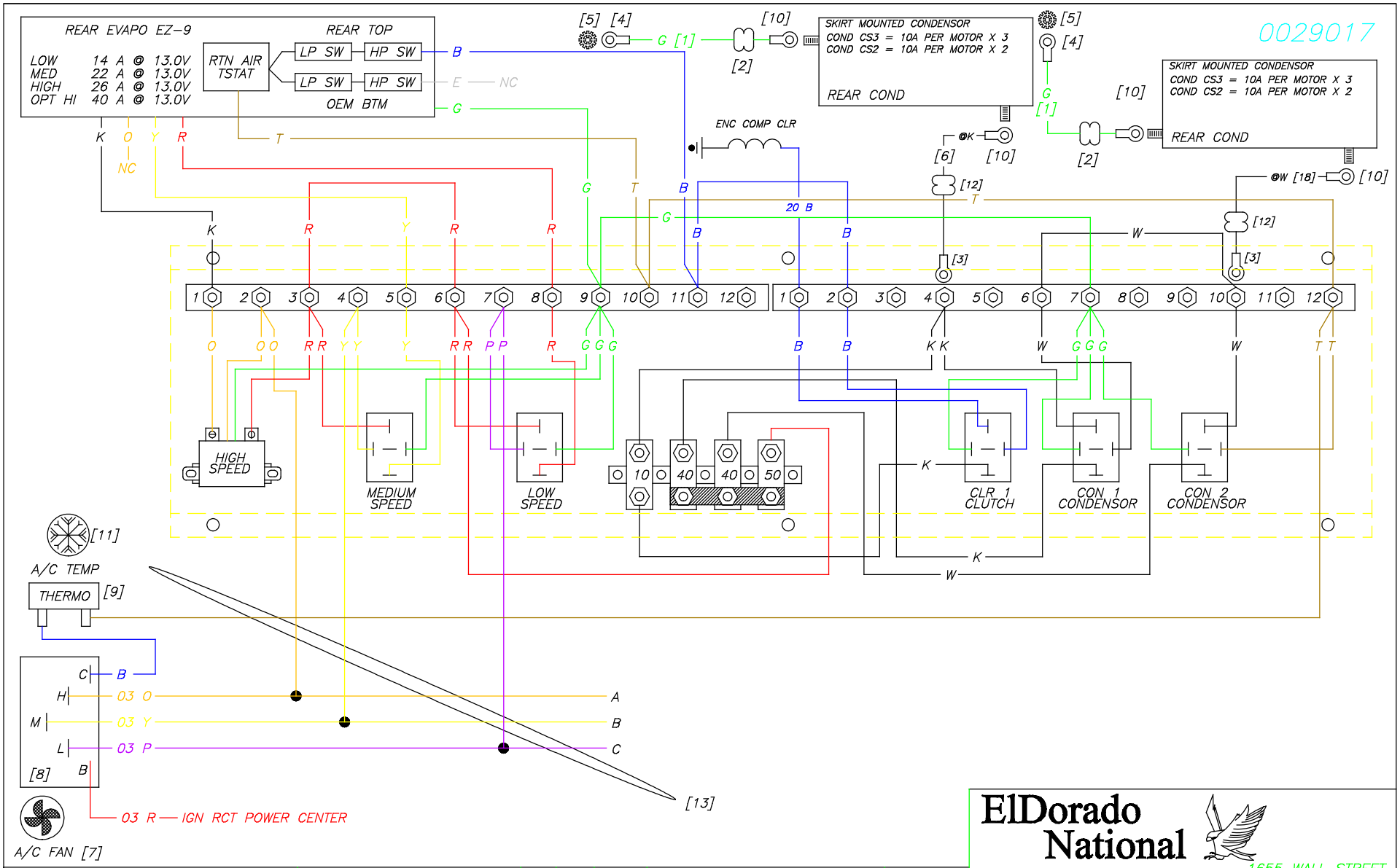

ElDorado National
— a THOR company —
1655 WALL STREET
SALINA, KS. 67401

NEXT ASSEMBLY: NONE	DRAWING INFORMATION						
SUPERCEDES: NONE	DRAWN: WARD	CKD:					
DO NOT SCALE DRAWING	DATE: 7/8/03	SIZE: A	C	BJM	1/14/09	N/C PART	13805
MARK PART NUMBER AND REVISION ON ALL PARTS	SCALE: NTS	WGT:	B	JWW	12/18/03	REMOVED 0022725 ADDED BOM 13	08594
THIS DRAWING IS THE PROPERTY OF ELDORADO NATIONAL COMPANY, A THOR INDUSTRIES COMPANY AND IS NOT TO BE DUPLICATED OR USED IN ANY WAY DETRIMENTAL TO THEIR BEST INTEREST. REV. 02/02	TOLERANCE UNLESS SPECIFIED		A	JWW	11/3/03	CHANGED GROUND AND TAN WIRES	08452
	FRACTIONS ± 1/16 DECIMALS .00 ± .06 ANGLES + 1 DEG.		–	JWW	7/8/03	RELEASE TO PRODUCTION	08068
			REV.	BY	DATE	DESCRIPTION	RELEASE #

TITLE: AC SCHEMATIC, AEN ACT 9333 & 9323 MAX

MATERIAL SPEC: SEE BOM

PART NUMBER: 0029017

PAGE 1 OF 3

NOTE
1. [Y] WHERE Y REFERS TO THE B.O.M. ITEM NUMBER.
2. ALL ELECTRICAL CHASSIS GROUND CONNECTIONS WILL USE STAR WASHERS.
3. ALL EXTERIOR WIRING CONNECTIONS WILL BE COVERED WITH MASTIC LINED HEAT SHRINK TUBING.
4. NC – NOT CONNECTED; NU – NOT USED
5. THE DASH A/C IS COMPLETELY SEPARATE FROM THE REAR A/C.
6. @ – 10 AWG WIRE; COND–CONDENSOR; CLR–CLUTCH; MTR–MOTOR; EVAPO–EVAPORATOR; COMP–COMPRESSOR.

0029017

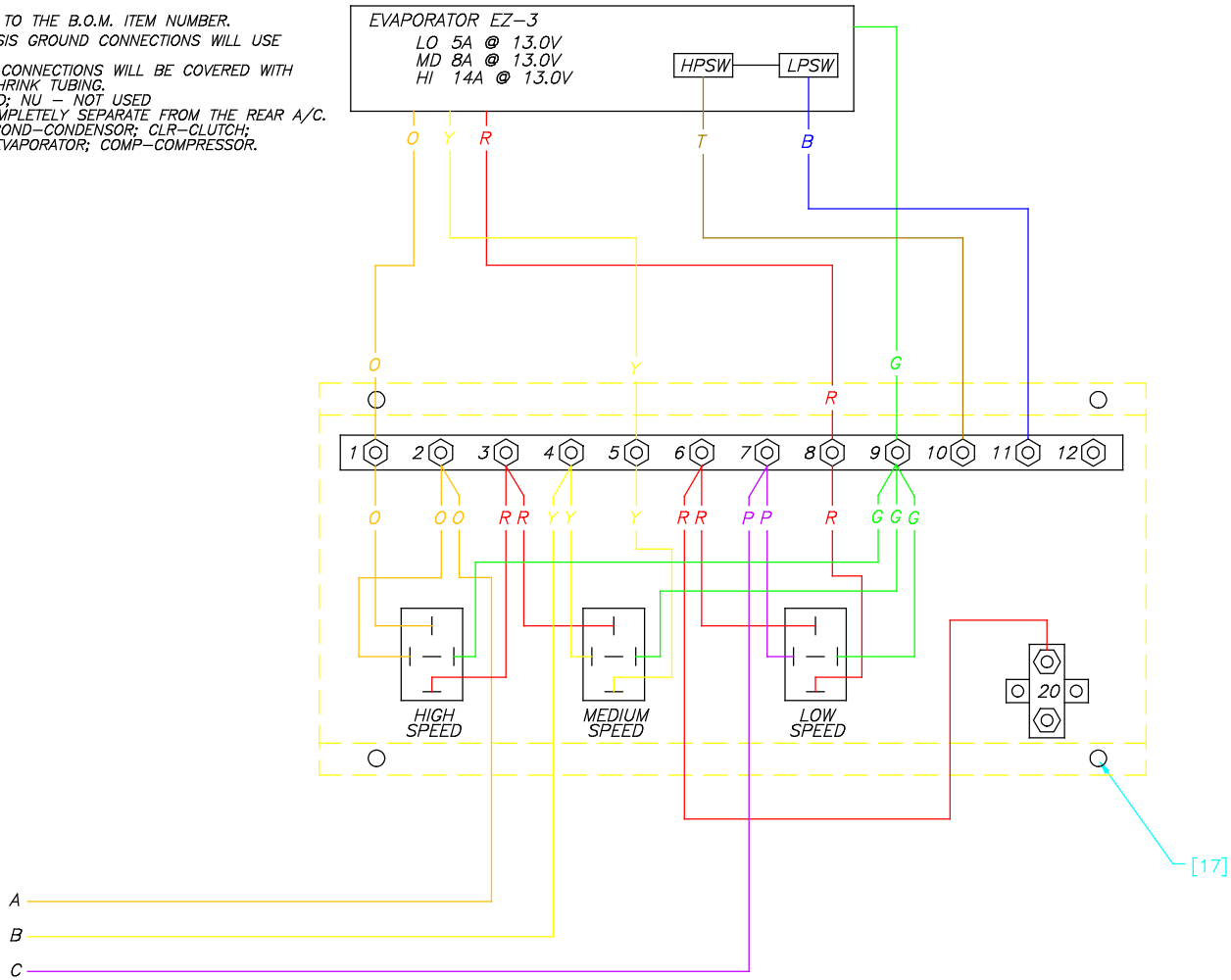

NEXT ASSEMBLY: NONE	DRAWING INFORMATION						
SUPERCEDES: NONE	DRAWN: WARD	CKD:					
DO NOT SCALE DRAWING	DATE: 7/8/03	SIZE: A	C	BJM	1/14/09	N/C PART	13805
MARK PART NUMBER AND REVISION ON ALL PARTS	SCALE: NTS	WGT:	B	JWW	12/18/03	REMOVED 0022725 ADDED BOM 13	08594
THIS DRAWING IS THE PROPERTY OF ELDORADO NATIONAL COMPANY, A THOR INDUSTRIES COMPANY AND IS NOT TO BE DUPLICATED OR USED IN ANY WAY DETRIMENTAL TO THEIR BEST INTEREST. REV. 02/02	TOLERANCE UNLESS SPECIFIED		A	JWW	11/3/03	CHANGED GROUND AND TAN WIRES	08452
	FRACTIONS ± 1/16		–	JWW	7/8/03	RELEASE TO PRODUCTION	08068
	DECIMALS .00 ± .06						
	ANGLES ± 1 DEG.		REV.	BY	DATE	DESCRIPTION	RELEASE #

ElDorado National
— a THOR company —
1655 WALL STREET
SALINA, KS. 67401

TITLE:
AC SCHEMATIC, AEN ACT
9333 & 9323 MAX

MATERIAL SPEC:
SEE BOM

PART NUMBER
0029017

PAGE 2 OF 3